Wall

Enrich the Walls with Light

Ramen wall sconce

Designers
Kenneth Ng, Edmund Ng

Chicago Athenaeum's Good Design Award 2020

Ramen is a playful circular sconce suitable for indoor or outdoor use. At either 9" or 12" in diameter, the magnetically-attached face plates are interchangeable. Users can easily customize to complement the surrounding decor, or just for the sake of an aesthetic change. A special paintable plate opens up even more opportunities for designers. Ramen's bowl-shaped body emits 360° of beautifully diffused light.

Wet-rated, Ramen is suitable for indoor or outdoor use.

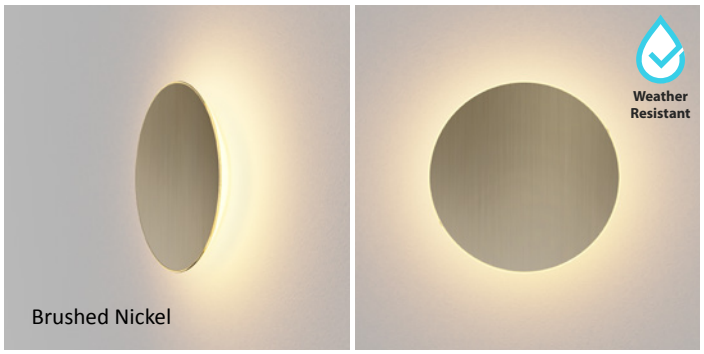

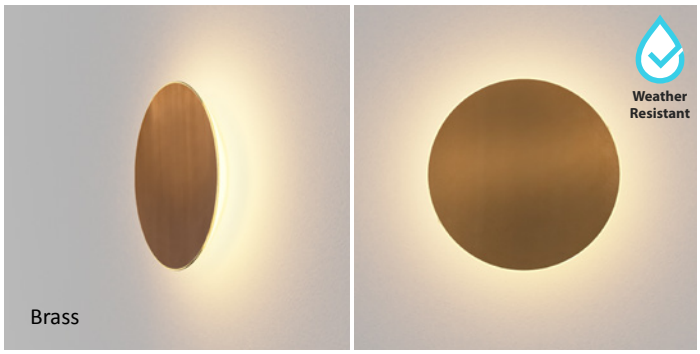

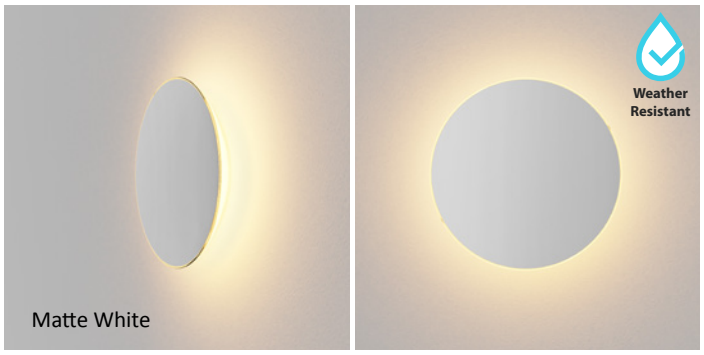

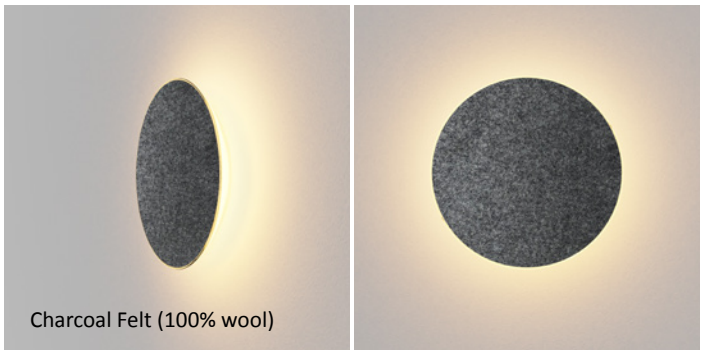

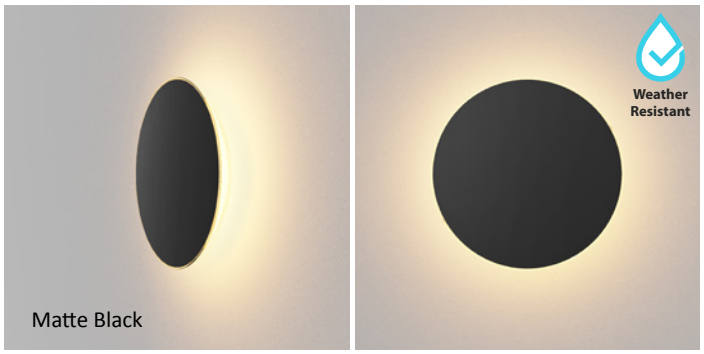

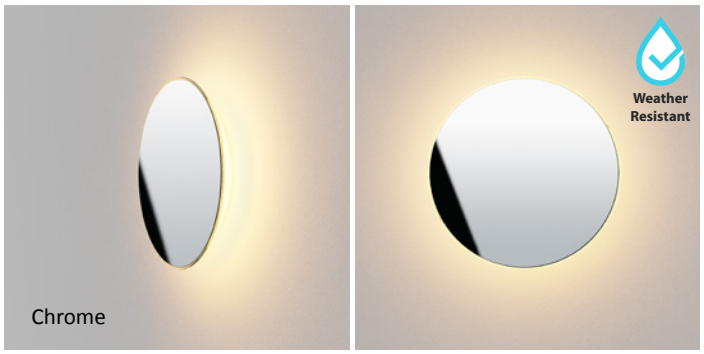

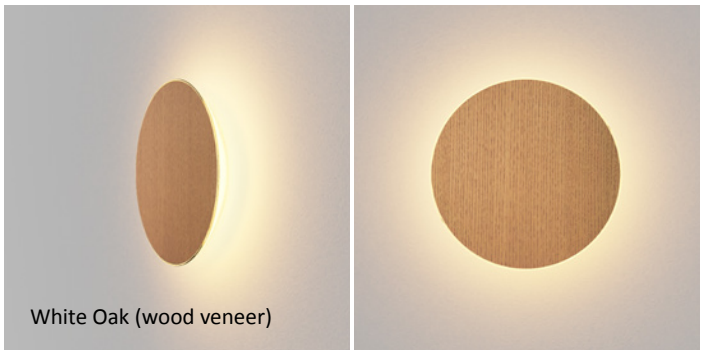

Choose from eight standard finishes including felt fabric, wood veneer and metal, all available in 9” and 12” diameters.

Create your own custom finish with a paintable plate. This option opens up endless opportunities: exactly match Ramen with your wall color; choose a complementary color; or let your creativity shine by painting a pattern, portrait, seasonal design, and so on. Since a magnet is all that's needed to change out the plate, you can easily make aesthetic changes throughout the year.

Lumens:	1500
Energy Consumption:	17.5 W
Rated Lifespan:	50,000 hours
Color Temperature:	Soft Warm (3,000 K)
Color Rendering Index (CRI) :	90
Brightness Adjustability:	Compatible with ELV wall dimmers
Material:	Aluminum, plastic
Safety Rating:	C-UL-US Certified
Warranty:	5 years (1 year for hardwire driver)
Voltage:	120V (Custom 277V option available, and requires extra lead time.)
Standard Plate Finishes:	Brass*, Chrome*, Matte White*, Matte Black*, Oiled Walnut, Charcoal Felt (100% wool), White Oak, Brushed Nickel*, Paintable (white)

**Weather Resistant*

RMW - _ _ - SW - _ _ _ - HW

- 09 = 9” diameter
- 12 = 12” diameter

- BRS = Brass*
- CRM = Chrome*
- MWT = Matte White*
- MTB = Matte Black*
- OWT = Oiled Walnut
- CCF = Charcoal Felt
- WOK = White Oak
- BNI = Brushed Nickel*
- PTB = Paintable

**Weather Resistant*

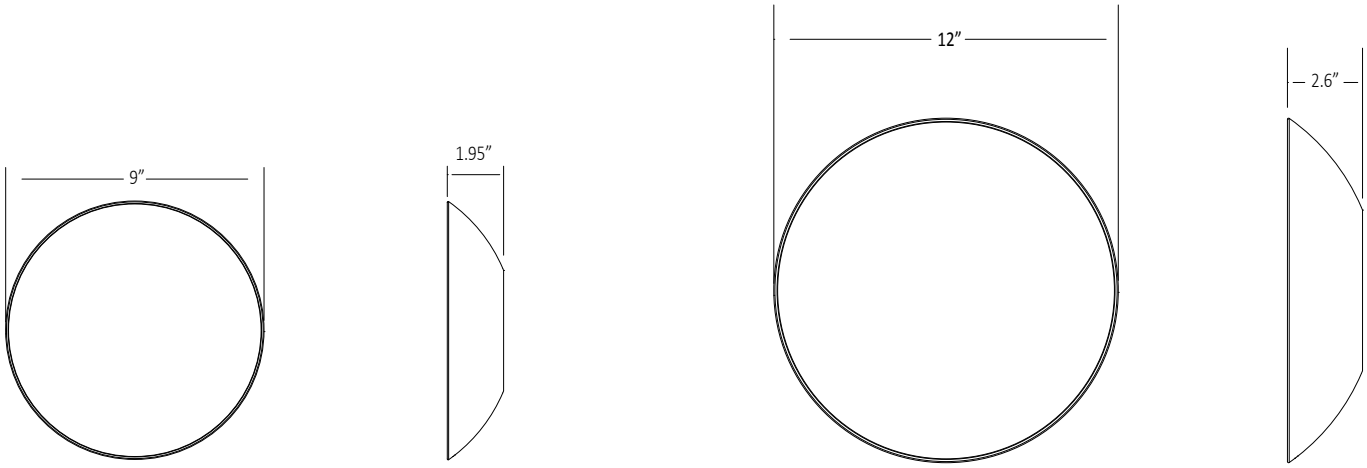

LEED Information

Integrative Process
To support high-performance, cost-effective project outcomes through an early analysis of the interrelationships among systems.
Koncept’s LED lighting fixtures operate at high efficacy, therefore helping to minimize energy costs. All Koncept lighting fixtures are dimmable so that occupants can choose the appropriate setting to avoid energy overuse.

Interior Lighting
To promote occupants’ productivity, comfort and well-being by providing high-quality lighting.
Koncept’s entire line of hardwired lighting fixtures are dimmable. Users can adjust the brightness settings to suit their needs. Furthermore, all products utilize high quality LED light sources with CRI over 80 and L70 rated lifespan over 50,000 hours.

koncept

Wall

Enrich the Walls with Light

Ramen with Back Dish

Designers
Kenneth Ng, Edmund Ng

Chicago Athenaeum's Good Design Award 2020

Experience unmatched versatility with our Ramen featuring the new Back Dish. Available in two sizes: an 18-inch back dish (to pair with the 9" Ramen) and a 24-inch back dish (to pair with the 12" Ramen). Elevate your space with matte White, matte black w/ Gold, and elegant Gold w/ white finishes. It features a 3-in-1 mounting solution that allows you to mount it as a wall sconce, a suspended pendant, or a flush-mounted ceiling light. The Ramen with a back dish is compatible with ELV dimmers, offering 1500 lumens of warm 3000k light. Furthermore, it is wet-rated as a wall sconce or flush ceiling light and damp-rated as a suspended pendant.

Lumens:	1500
Energy Consumption:	17.5 W
Rated Lifespan:	50,000 hours
Color Temperature:	Soft Warm (3,000 K)
Color Rendering Index (CRI) :	90
Brightness Adjustability:	Compatible with ELV wall dimmers
Material:	Aluminum, plastic
Safety Rating:	C-UL-US Certified wet rated (when used as wall sconce)
Warranty:	5 years (1 year for hardwire driver)
Voltage:	120V (Custom 277V option available, and requires extra lead time.)
Standard Plate Finishes:	Brass*, Chrome*, Matte White*, Matte Black*, Oiled Walnut, Charcoal Felt (100% wool), White Oak, Brushed Nickel*, Paintable (white)
Back Dish Finishes:	Matte Black & Gold, Matte White, Gold & Matte White
Mounting option:	Suspension, Flush ceiling, wall sconce **Weather Resistant*

RMW - _ _ - SW - _ _ _ - HW + _ _ BD - _ _ _

- 09 = 9” diameter
- 12 = 12” diameter

- BRS = Brass*
- CRM = Chrome*
- MWT = Matte White*
- MTB = Matte Black*
- OWT = Oiled Walnut
- CCF = Charcoal Felt
- WOK = White Oak
- BNI = Brushed Nickel*
- PTB = Paintable

**Weather Resistant*

- 18 = 18” Back Dish
- 24 = 24” Back Dish

- GMW = Gold & Matte White
- MBG = Matte Black w/ Gold Interior
- MWT = Matte White

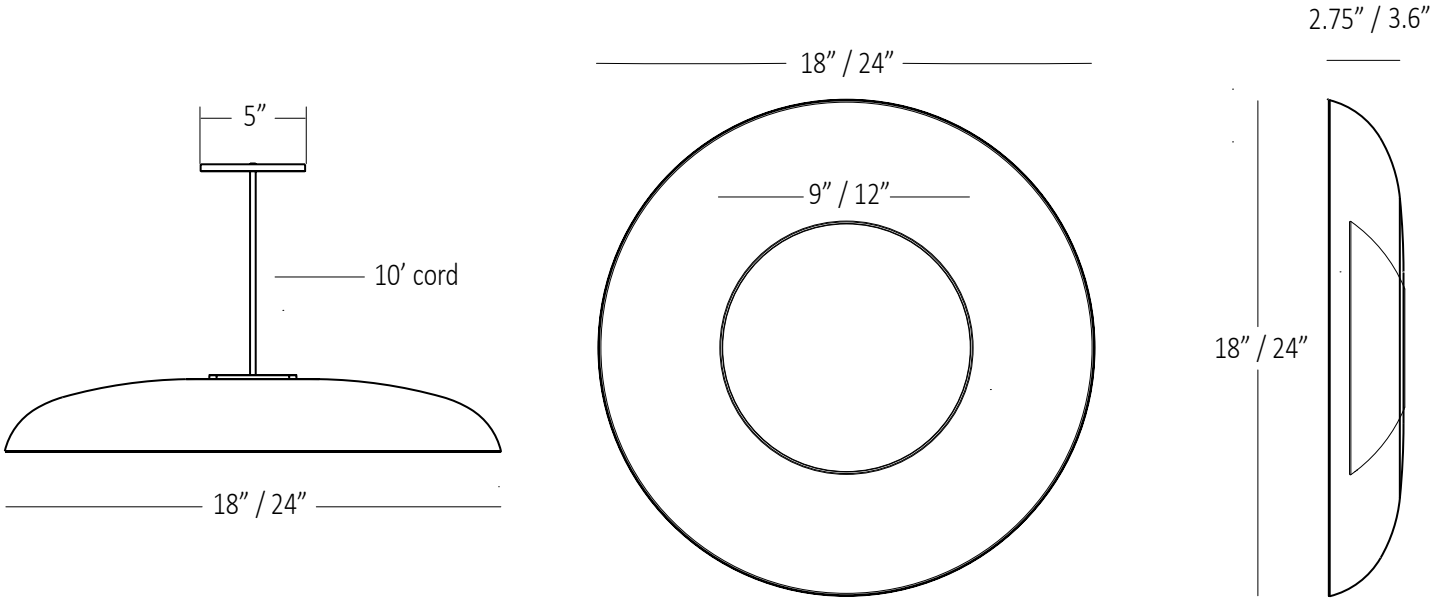

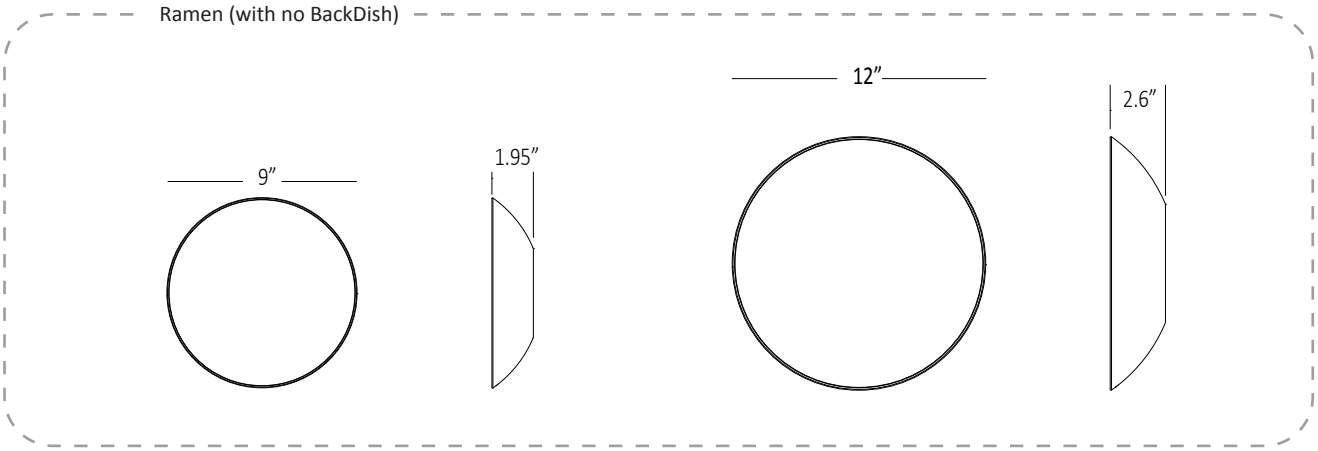

LEED Information

Integrative Process
To support high-performance, cost-effective project outcomes through an early analysis of the interrelationships among systems. Koncept’s LED lighting fixtures operate at high efficacy, therefore helping to minimize energy costs. All Koncept lighting fixtures are dimmable so that occupants can choose the appropriate setting to avoid energy overuse.

Interior Lighting
To promote occupants’ productivity, comfort and well-being by providing high-quality lighting.
Koncept’s entire line of hardwired lighting fixtures are dimmable. Users can adjust the brightness settings to suit their needs. Furthermore, all products utilize high quality LED light sources with CRI over 80 and L70 rated lifespan over 50,000 hours.